

1.Use a hammer drill to drill a hole with a diameter of 8 mm.

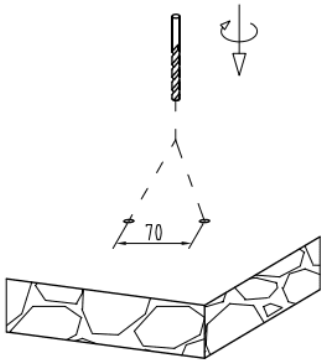

1

2.Place two M6 iron expansion into the holes.

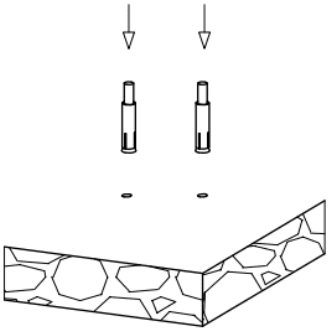

2

3.Fix the fixture with the screws and expansion bolt

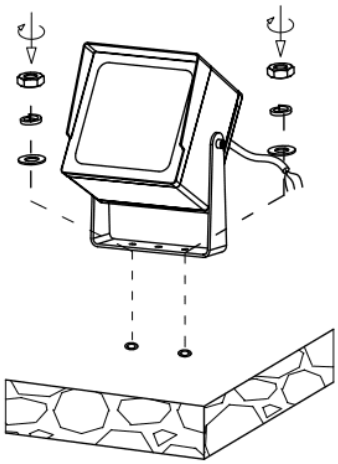

3

4.Wiring method:

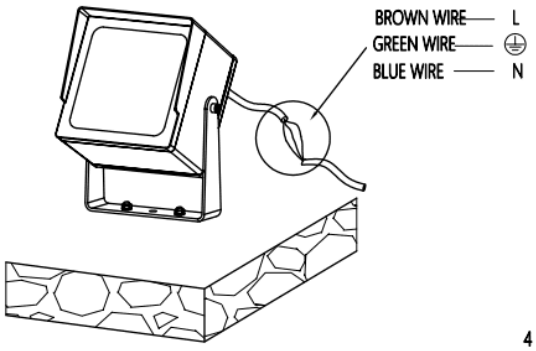

4

5.Wrap the wiring wire with waterproof tape.

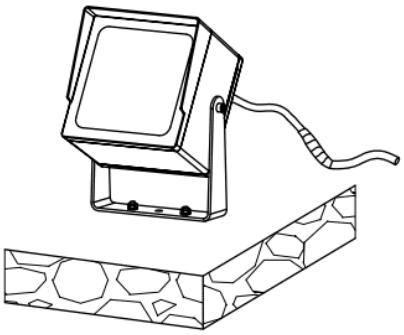

5